SET LIVING SQUARE

Drop in basin, wall mounted
81643.2

TECHNICAL DATA

Order no.	81643.2
Certified to	EN 31
Dimensions	650 x 480 mm
Inside dimensions of the basin	480 x 295 mm
Specification	Always to be fixed to the wall. Charge 104 – 1 centre tap hole, with overflow
Special specification	Charge 108 – 3 tap holes, with overflow Charge 109 – without tap holes, with overflow Charge 136 – 3 tap holes, distance 8 inches, with overflow
Weight	16,0 kg
Mounting acc. incl.	Template, order no. 89843.7
Mounting acc. excl.	Mounting set M10 x 140 mm, order no. 89988.2
Colours	see colour table

SPECIFICATION TEXT

Drop in basin wall mounted Laufen-LIVING SQUARE, sanitary ceramic EN 31, dimensions 650 x 480 mm, angular
1 centre tap hole
Special feature: overflow channel glazed
Further options / accessories: 3 tap holes, without tap holes, with or without overflow, 3 tap holes distance 8 inches with overflow, furniture
Order no. 81643.2
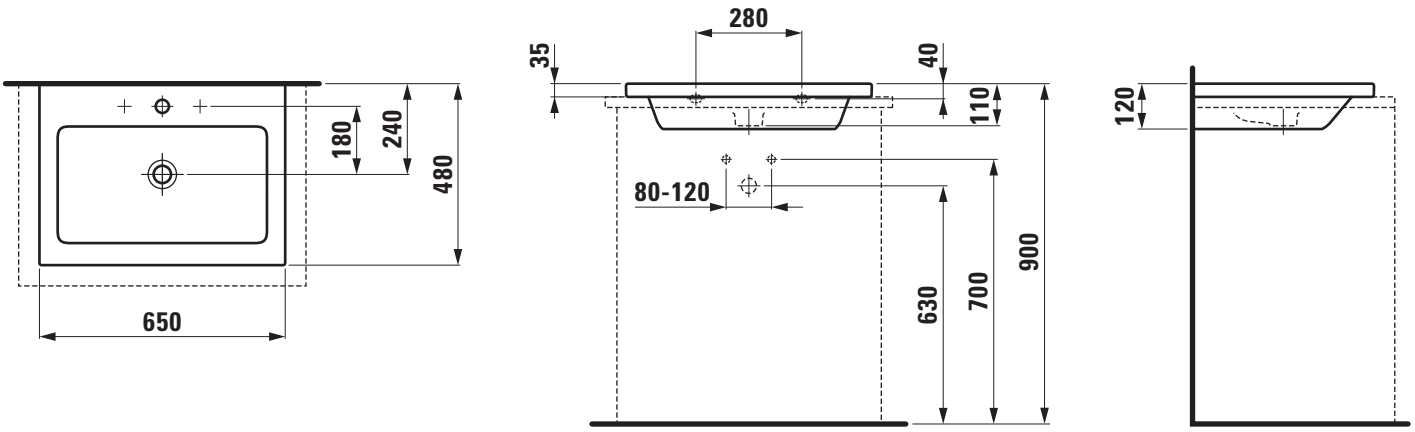
TECHNICAL DRAWINGS / S 1 : 20