Technische Daten/ Technical Data

KLUDI BINGO STAR
kitchen faucet
DN 15

Ref.: 428510578

Finishes:
05 chrome

Product description
Manufacturer KLUDI GmbH & Co. KG
Typ: KLUDI BINGO STAR
kitchen faucet
Ref.: 428510578

kitchen faucet
single lever mixer
extractable spout
1-hole mounted
solid lever, metal
lateral actuation
aerator M16,5 PCA laminar
protected against back flow
ceramic cartridge with hot water safety device
flow rate at 3 bar 10 l/min.
swivel spout (230°)
flexible hoses G3/8 DVGW approved
shank-fixing
extractable hoses

Produktabbildung/ Product picture



Maßzeichnung/ Dimensional drawing

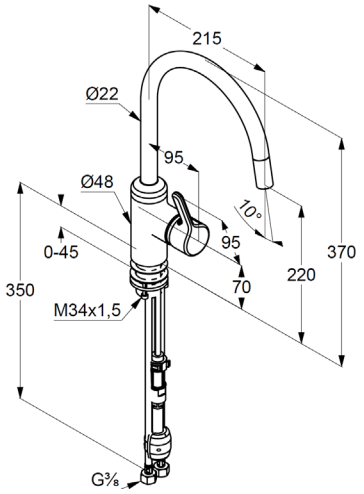

Durchfluss/ Flow rate

