Technische Daten/ Technical Data

KLUDI-AUREA
kitchen faucet
DN 15

Ref.: 55852N575

Finishes:
N5 Stainless Brushed Nickel PVD

Product description
Manufacturer KLUDI GmbH & Co. KG
Typ: KLUDI-AUREA
kitchen faucet
Ref.: 55852N575

kitchen faucet
single lever mixer
extractable hand spray
automatic diverter: jet/aerator
1-hole mounted
quick connect
lateral actuation
protected against back flow
ceramic cartridge
lever perpendicular=cold water
flow rate at 3 bar 6,5 l/min.
swivel spout (230°)
flexible hoses G3/8 DVGW approved
shank-fixing
extractable hoses 250mm

Produktabbildung/ Product picture



Maßzeichnung/ Dimensional drawing

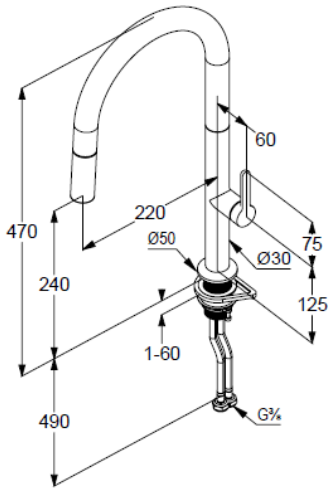

Durchfluss/ Flow rate

